SALES DRAWING SALES DRAWING

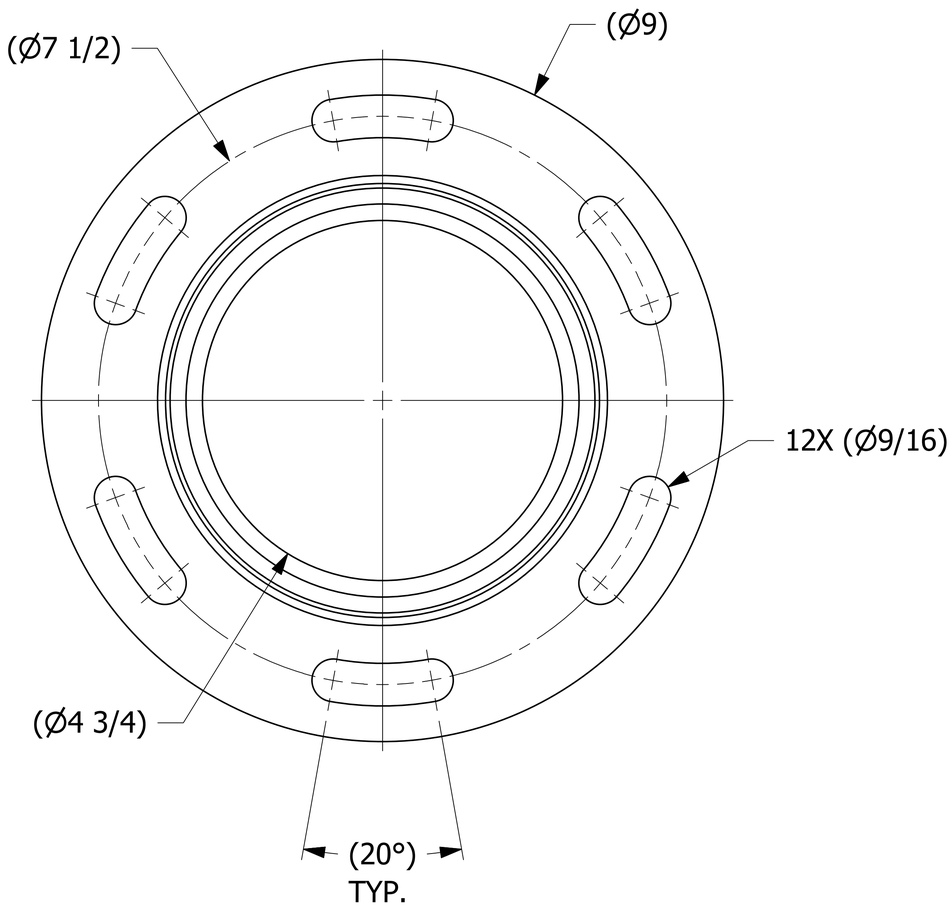

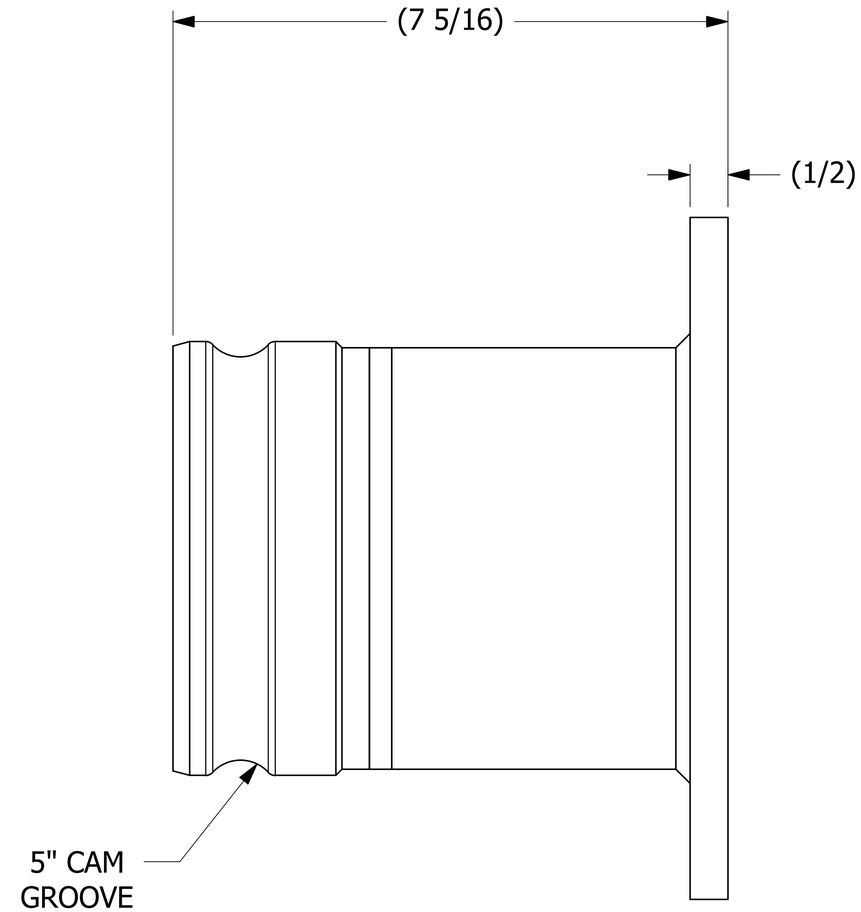

SALES DRAWING SALES DRAWING

REV	BY	DATE	REF #	PUB
B	BP	3/14/23	202303141419	BP

UNLESS OTHERWISE SPECIFIED DIMENSIONAL TOLERANCES

FRACTIONAL:	±1/16
X.XX:	±.03
X.XXX:	±.015
ANGULAR:	±1°

DEBURR ALL SHARP EDGES. ALL MACHINED SURFACES TO HAVE A 125 RMS FINISH UNLESS NOTED OTHERWISE.

THIRD ANGLE PROJECTION

DRAWN BY:	CHL
CHECKED BY:	ACC
PROTOTYPE DATE:	3/1/2002
APPROVED FOR PRODUCTION BY:	ACC
PRODUCTION DATE:	6/11/2007
SIZE:	D
DRAWING #:	16233

SALCO PRODUCTS, INC.

PART NAME: QUICK CONNECT ADAPTER FLANGE 5"

MATERIAL: 6063-T6 ALUMINUM

PROJECT #: 011001 | SHEET #: 1 OF 1 | SCALE: 1:1

PART #: PD5AKF02

THIS PRINT, PROPERTY OF SALCO PRODUCTS INC, CONTAINS PROPRIETARY INFORMATION AND MUST NOT BE COPIED, REPRODUCED, OR USED DETRIMENTALLY TO OUR INTEREST.